MAILBOXES.com™

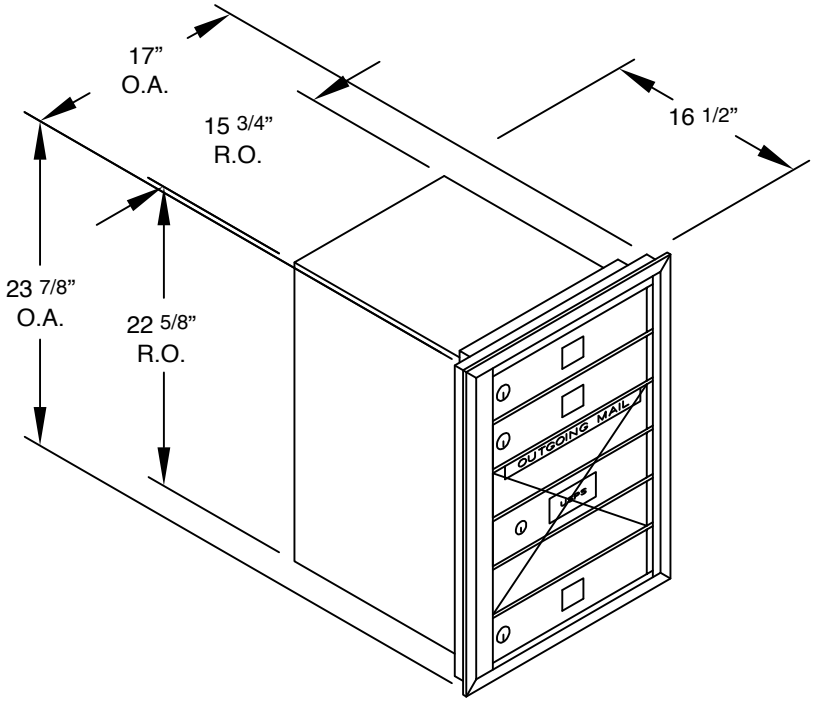

(1) 3706S–03 – FRONT LOADING

(3) 'MB1' DOORS
(1) 'OM3' OUTGOING MAIL COMPARTMENT

MODEL #3706S–03

4C HORIZONTAL MAILBOXES–FRONT LOADING

AVAILABLE COLORS:
ALUMINUM, BRONZE, SANDSTONE OR BLACK

AVAILABLE FOR:
USPS ACCESS OR PRIVATE ACCESS

REVISED: 8/2026

Established in 1936, Salsbury Industries is the industry leader in manufacturing and distributing quality mailboxes.

SALSBURY INDUSTRIES
Manufacturing Since 1936®