SPB-190

Stub post base for 3” O/D Pole

Mounting Template and Installation Instructions

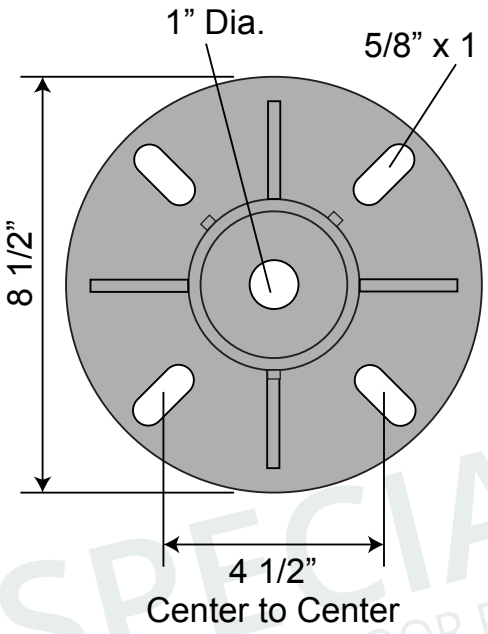

Drawing Not To Scale

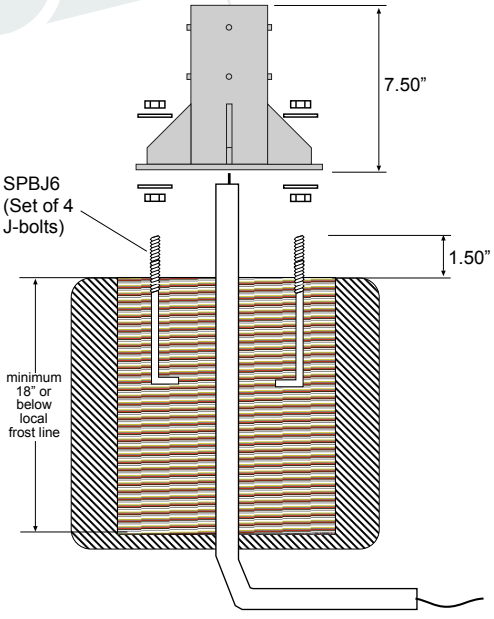

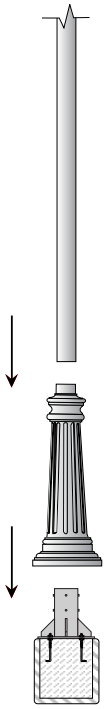

DRAWING NUMBER: 22563-1l

CUSTOMER: N/A

PROJECT: N/A

DRAWING DATE: 08/22/2019

DRAWING DESCRIPTION:

SPB-190

Special Lite Products is not responsible for checking local municipal codes. Please verify specifications with your municipality before placing an order.

This document contains confidential and proprietary information that is the property of Special Lite Products. It may not be shared, copied or used in whole or in part with third parties without the expressed written consent of Special Lite Products.

FABRICATION TO BEGIN AFTER DRAWING HAS BEEN APPROVED, SIGNED THEN FAXED OR EMAILED TO SPECIAL LITE PRODUCTS.

Signature: _____ **Date:** _____